1233 W St. Georges Ave., Linden, NJ 07036 * 908-925-7500* 908-925-9240

SPECIFICATIONS

WF-ST8X6-LCCH-115-01-SGD Model Number	**Sconce** Type
ADA Sconce Name	Project
	QTY

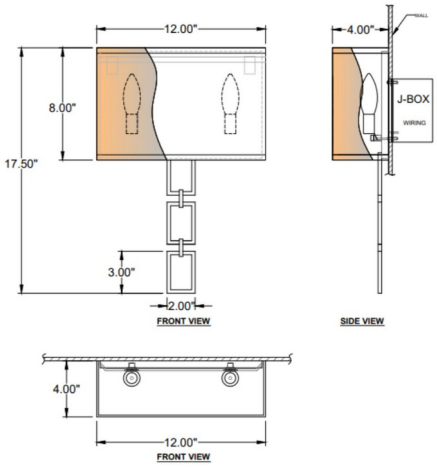

Describe Special Modifications

Warranty: 1-Year Limited Warranty,
Complete warranty terms located at: www.litetopslampshades.com

CATALOG NUMBER
Example: WF-ST8X6-LCCH-115-01-SGD-120V

Hardware Style Code	Fabric/Material/Color Options	Series Code	Finish Options	Lamping	Voltage	Other Size Options
WF-ST8X6	**115-01 –** White Linen **115-05 – Off** White Linen **115-62 –** Black Linen **115-73 –** Gray Butcher Linen **115-96 –** Red Linen **124-70 –** Teal Pongee Silk **136-50 –** Platinum Silkscreen **142-01 –** Global White **143-26 –** Geneva Linen Ash **145-09 –** Cream Aberdeen **174-21 –** Tan Silk Shantung **174-25 –** Chocolate Silk Shantung **More options at www.litetopslampshades.com**	**LCCH**	**APW -** Aged Pewter **GWH-** Gloss White **MBK -** Matte Black **OB-** Oil Rubbed Bronze **SGD –** Sun Gold **SN –** Satin Nickel **SVPC –** Silver powder coatl	**E26X2 -** 2 Medium Based **E12X2 -** 2 Candelabra **GU24X4 -** 4 GU24 CFL **LEDMOD2700K -** LED Module, 2700K, 840 LM Per Board **LEDMOD3000K –** LED Module, 3000K, 1028 LM Per Board **LEDMOD3500K –** LED Module, 3500K, 1057 LM Per Board **LEDMOD4000K –** LED Module, 4000K, 1087 LM Per Board (Accepts 1 Board)	**120V** 120V **277V** 277V	