1233 W St. Georges Ave., Linden, NJ 07036 * 908-925-7500* 908-925-9240

SPECIFICATIONS

PD-AC2024-115-05-412OB Model Number	**Pendant** Type
SOHO Name	Project
	QTY

Describe Special Modifications

Warranty: 1-Year Limited Warranty,
Complete warranty terms located at: www.litetopslampshades.com

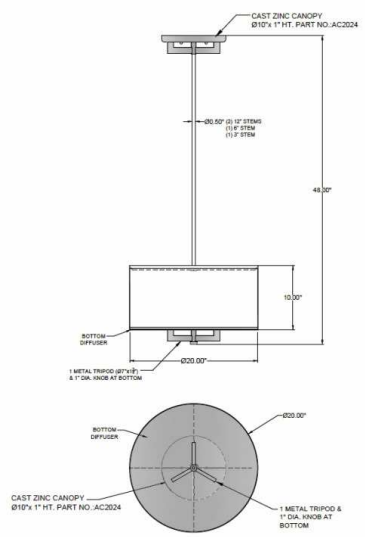

CATALOG NUMBER
Example: PD-AC2024-115-05-412OB-LEDMOD2700K-120V

Hardware Style Code	Fabric/Material/Color Options	Series Code	Finish Options	Lamping	Voltage	Other Size Options
PD-AC2024	**115-01** White Linen **115-05** Off White Linen **115-62** Black Linen **115-73** Gray Butcher Linen **115-96** Red Linen **124-70** Teal Pongee Silk **136-50** Platinum Silkscreen **142-01** Global White **143-26** Geneva Linen Ash **145-01** White Aberdeen **145-09** Cream Aberdeen **174-21** Tan Silk Shantung **174-25** Chocolate Silk Shantung **More options at www.litetopslampshades.com**	**412**	**APW -** Aged Pewter **GWH-** Gloss White **MBK -** Matte Black **OB-** Oil Rubbed Bronze **SN -** Satin Nickel	**E26X3 -** 3 Medium Based **GU24X3 - 3** GU24 CFL **LEDMOD2700K -** LED Module, 2700K, 2600 LM Per Board **LEDMOD3000K -** LED Module, 3000K, 2680 LM Per Board **LEDMOD3500K -** LED Module, 3500K, 2720 LM Per Board **LEDMOD4000K -** LED Module, 4000K, 2820 LM Per Board	**120V** 120V **277V** 277V	