1233 W St. Georges Ave., Linden, NJ 07036 * 908-925-7500* 908-925-9240

# SPECIFICATIONS

**PD-5855-LCM-3LT-862F-GLWH** — Model Number

**Pendant** — Type

**Fish Laser Cut Drum** — Name

Project

QTY

## Describe Special Modifications

**Warranty:** 1-Year Limited Warranty,
Complete warranty terms located at: www.litetopslampshades.com

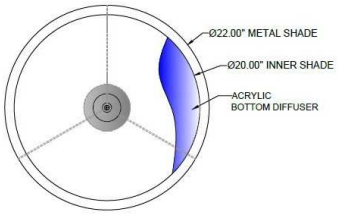


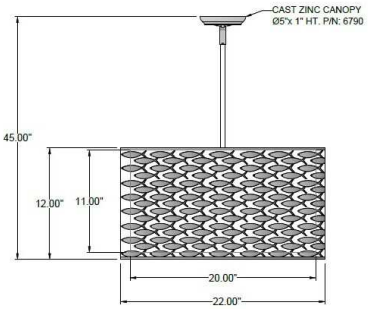


**CATALOG NUMBER**
**Example: PD-5855-LCM-3LT-862F-GLWH -GU24X3-120V**

| Hardware Style Code | Fabric/Material/Color Options | Series Code | Finish Options | Lamping | Voltage | Other Size Options |
|---|---|---|---|---|---|---|
| **PD-5855** | **Outer**<br>LCM - Laser Cut Metal<br><br>**More options at www.litetopslampshades.com** | 862F | **APW -** Aged Pewter<br>**GLWH-** Gloss White<br>**MBK -** Matte Black<br>**OB-** Oil Rubbed Bronze<br>**SN -** Satin Nickel<br>**SVPC -** Silver Powder Coat<br>**OCB -** Oculux Bronze | **E12X3 -** 3 Candleabra<br>**GU24X3 -** 3 GU24 CFL | **120V** 120V<br>**277V** 277V | |